FD & FGE 3.5 - 5.0
technical specifications

STANDARD SPECIFICATIONS

		Counterbalance trucks Designation according VDI 3586									VDI 2198 Registration note
		Manufacturers Data and Design Characteristics									
CHARACTERISTICS	1.1	Manufacturer		UniCarriers							
	1.2	Model name		FD40-E1		FGE40-E1		FD40H-E1		FGE40H-E1	
		Model code		D1F4A35Q	D1F4F35Q	J1F4A35LQ	J1F4F35LQ	D1F4A40Q	D1F4F40Q	J1F4A40LQ	J1F4F40LQ
	1.3	Power unit: Electric, Diesel, Gasoline, LPG, others		Diesel	Diesel	LPG	LPG	Diesel	Diesel	LPG	LPG
	1.4	Operation		Sit	Sit	Sit	Sit	Sit	Sit	Sit	Sit
	1.5	Load capacity	Q(t)	3.5(4.0)	3.5(4.0)	3.5(4.0)	3.5(4.0)	4.0	4.0	4.0	4.0
	1.6	Load center	c(mm)	600(500)	600(500)	600(500)	600(500)	600(500)	600(500)	600(500)	600(500)
	1.8	Front overhang	x(mm)	560	560	560	560	560	560	560	560
	1.9	Wheel base	y(mm)	2000	2000	2000	2000	2000	2000	2000	2000
WEIGHTS	2.1	Service weight (without battery)	kg	5740	5770	5740*	5770*	5995	6025	5995*	6025*
	2.2	Axle load with load, front/rear	kg	8040/1200	8055/1215	8025/1250	8050/1260	8840/1155	8860/1165	8795/1210	8810/1225
	2.3	Axle load without load, front/rear	kg	2510/3230	2525/3245	2495/3280	2520/3290	2520/3475	2540/3485	2475/3530	2490/3545
TIRES	3.1	Tyres front/rear (C=Cushion,SE=superelastic,P=pneumatic)		Pneumatic	Pneumatic	Pneumatic	Pneumatic	Pneumatic	Pneumatic	Pneumatic	Pneumatic
	3.2	Tyre size, front		8.25-15-12PR(I)	8.25-15-12PR(I)	8.25-15-12PR(I)	8.25-15-12PR(I)	300-15-18PR(I)	300-15-18PR(I)	300-15-18PR(I)	300-15-18PR(I)
	3.3	Tyre size, rear		7.00-12-12PR(I)	7.00-12-12PR(I)	7.00-12-12PR(I)	7.00-12-12PR(I)	7.00-12-12PR(I)	7.00-12-12PR(I)	7.00-12-12PR(I)	7.00-12-12PR(I)
	3.5	Wheels, number front/rear (x=powered)		2x/2	2x/2	2x/2	2x/2	2x/2	2x/2	2x/2	2x/2
	3.6	Tread, front	b-10(mm)	1250	1250	1250	1250	1180	1180	1180	1180
	3.7	Tread, rear	b-11(mm)	1180	1180	1180	1180	1180	1180	1180	1180
DIMENSIONS	4.1	Tilt Mast/carriage, forward/backward	α/β (°)	6/12	6/12	6/12	6/12	6/12	6/12	6/12	6/12
	4.2	Height mast fully lowered	h_1 (mm)	2145	2145	2145	2145	2145	2145	2145	2145
	4.3	Free lift	h_2 (mm)	130	130	130	130	130	130	130	130
	4.4	Lift height	h_3 (mm)	3000	3000	3000	3000	3000	3000	3000	3000
	4.5	Height mast fully extended	h_4 (mm)	4300	4300	4300	4300	4300	4300	4300	4300
	4.7	Overhead guard height	h_6 (mm)	2250**	2250**	2250**	2250**	2250**	2250**	2250**	2250**
	4.8	Seat height/Standing height	h_7 (mm)	1168	1168	1168	1168	1168	1168	1168	1168
	4.12	Towing coupler height	h_{10} (mm)	355	355	355	355	355	355	355	355
	4.19	Overall length	l_1 (mm)	4165	4165	4165	4165	4200	4200	4200	4200
	4.20	Length to fork face	l_2 (mm)	3095	3095	3095	3095	3130	3130	3130	3130
	4.21	Overall width	b_1 (mm)	1490	1490	1490	1490	1490	1490	1490	1490
	4.22	Fork dimensions	s,e,l (mm)	50x150x1070	50x150x1070	50x150x1070	50x150x1070	50x150x1070	50x150x1070	50x150x1070	50x150x1070
	4.23	Carriage DIN 15173, Class / Form A,B		3A	3A	3A	3A	3A	3A	3A	3A
	4.24	Carriage width	b_3 (mm)	1200	1200	1200	1200	1200	1200	1200	1200
	4.31	Mast underclearance loaded	m_1 (mm)	145	145	145	145	145	145	145	145
	4.32	Underclearance centre wheelbase	m_2 (mm)	225	225	225	225	225	225	225	225
	4.33	Right angle stacking aisle with pallet 1000x1200 across forks	Ast (mm)	4480	4480	4480	4480	4512	4512	4512	4512
	4.34	Right angle stacking aisle with pallet 800x1200 across forks	Ast (mm)	4680	4680	4680	4680	4712	4712	4712	4712
	4.35	Turning radius	Wa mm	2720	2720	2720	2720	2750	2750	2750	2750
	4.36	Turning radius, inner	mm	820	820	820	820	820	820	820	820
PERFORMANCE	5.1	Travelling speed with/without load	km/h	18.0/19.5	23.5/24.5	18.0/18.0	22.0/22.0	18.0/19.5	23.5/24.5	18.0/18.0	22.0/22.0
	5.2	Lifting speed with/without load	mm/s	500/520	500/520	480/480	480/480	500/520	500/520	480/480	480/480
	5.3	Lowering speed with/without load	mm/s	500/500	500/500	500/500	500/500	500/500	500/500	500/500	500/500
	5.6	Drawbar pull, with/without load	kN	29350/23220	32280/25540	30500/26100	30500/26100	30200/24070	33220/26470	31400/27000	31400/27000
	5.8	Gradeability with/without load	%	27/27	30/30	32/27	32/27	26/24	29/26	28/26	28/26
	5.9	Acceleration with/without load	s	4.9/4.2	4.9/4.2	5.1/4.4	5.1/4.4	5.3/4.5	5.3/4.5	5.4/4.6	5.4/4.6
	5.10	Service brake		Hydraulic	Hydraulic	Hydraulic	Hydraulic	Hydraulic	Hydraulic	Hydraulic	Hydraulic
DRIVE	7.1	Engine manufacturer/type		ZD30	ZD30	TB45	TB45	ZD30	ZD30	TB45	TB45
	7.2	Engine rated power according ISO 1585	kW	55	55	71.3	71.3	55	55	71.3	71.3
	7.3	Rated engine revolutions	min^{-1}	2400	2400	2450	2450	2400	2400	2450	2450
	7.4	Number of cylinders/Displacement	cm^3	4/2953	4/2953	6/4478	6/4478	4/2953	4/2953	6/4478	6/4478
		Transmission speed		1/1	2/1	1/1	2/1	1/1	2/1	1/1	2/1
OTHERS	8.1	Type of drive control		Torque converter							
	8.2	Working pressure attachments	bar	13.7	13.7	13.7	13.7	13.7	13.7	13.7	13.7
	8.4	Noise level operator's ear according EN12053	dB(A)	82	82	82	82	82	82	82	82

* Excluding the weight for LPG bottle
** Overhead guard height with cabin: 2,381 mm

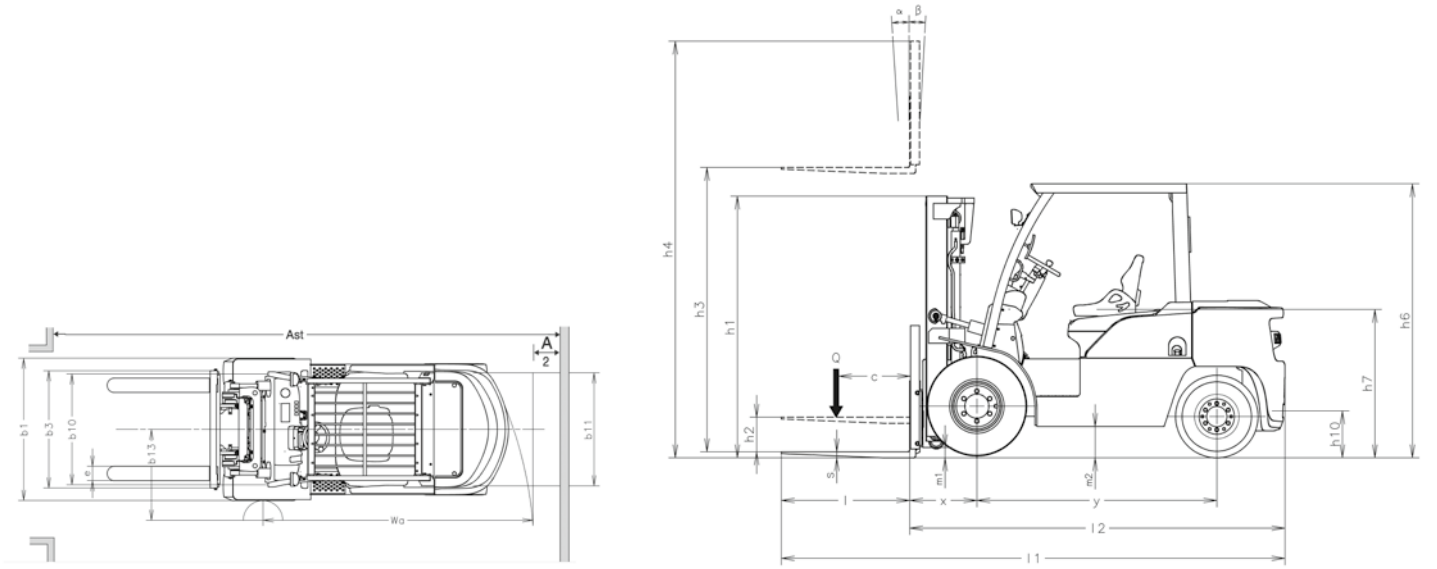

DIMENSIONS

MAST SPECIFICATIONS & RATED CAPACITIES: FD & FGE: 3.5 - 4.0 TONNE

Mast type	Mast name	Max. fork height	Overall height			Free lift		Tilt angle forward/ backward	Load capacity[2] Load center 600 mm	
			Fully lowered	Fully extended					3.5 tonne	4.0 tonne
				Without backrest	Std backrest	Without backrest	Std backrest			
		mm[1]	mm[1]	mm[1]	mm[1]	mm[1]	mm[1]	degrees	kg[1]	
TWO STAGE (WIDE VIEW 2W)	2W 300	3000	2145	3835	4300	130	130	6-12	3500	4000
	2W 330	3300	2295	4135	4600	130	130	6-12	3500	4000
	2W 350	3500	2430	4335	4800	130	130	6-12	3500	4000
	2W 370	3700	2545	4535	5000	130	130	6-12	3500	4000
	2W 400	4000	2745	4835	5300	130	130	6-12	3500	4000
	2W 450	4500	2995	5335	5800	130	130	6-6	3500	4000
	2W 500	5000	3245	5835	6300	130	130	6-6	3500	4000
TWO STAGE (FULL FREE 2F)	2F 300	3000	2145	3860	4300	1335	895	6/12	3500	4000
	2F 330	3300	2295	4160	4600	1485	1045	6/12	3500	4000
	2F 350	3500	2430	4360	4800	1620	1180	6/12	3500	4000
	2F 370	3700	2545	4560	5000	1735	1295	6/12	3500	4000
	2F 400	4000	2745	4860	5300	1935	1495	6/12	3500	4000
THREE STAGE (FULL FREE 3F)	3F 385	3850	1995	4725	5150	1175	750	6-6	3500	4000
	3F 430	4300	2145	5175	5600	1325	900	6-6	3500	4000
	3F 475	4750	2295	5625	6050	1475	1050	6-6	3500	4000
	3F 515	5150	2430	6025	6450	1615	1185	6-6	3500*	3950*
	3F 550	5500	2545	6375	6800	1725	1300	6-6	3300*	3800*
	3F 600	6000	2745	6875	7300	1925	1500	6-6	3200*	3700*
	3F 650	6500	2995	7375	7800	2175	1750	6-6	2800*	2800*
	3F 700	7000	3245	7875	8300	2425	2000	6-6	2100*	2100*

[1] 1 inch = 25.4 mm 1kg = 0.4536 lb [2] Capacity with sinlge pneumatic tires unless indicated * Capacity with double tires

STANDARD SPECIFICATIONS

		Counterbalance trucks Designation according VDI 3586									VDI 2198 Registration note
		Manufacturers Data and Design Characteristics									
CHARACTERISTICS	1.1	Manufacturer		UniCarriers							
	1.2	Model name		FD45-E1		FGE45-E1		FD50-E1		FGE50-E1	
		Model code		D1F4A45Q	D1F4F45Q	J1F4A45LQ	J1F4F45LQ	DG1F4A50Q	DG1F4F50Q	JG1F4A50LQ	JG1F4F50LQ
	1.3	Power unit: Electric, Diesel, Gasoline, LPG, others		Diesel	Diesel	LPG	LPG	Diesel	Diesel	LPG	LPG
	1.4	Operation		Sit	Sit	Sit	Sit	Sit	Sit	Sit	Sit
	1.5	Load capacity	Q(t)	4.5	4.5	4.5	4.5	5.0	5.0	5.0	5.0
	1.6	Load center	c(mm)	600	600	600(500)	600(500)	600	600	600	600
	1.8	Front overhang	x(mm)	587	587	587	587	597	597	597	597
	1.9	Wheel base	y(mm)	2000	2000	2000	2000	2150	2150	2150	2150
WEIGHTS	2.1	Service weight (without battery)	kg	6760	6790	6760*	6790*	7310	7340	7310*	7340*
	2.2	Axle load with load, front/rear	kg	9855/1405	9870/1420	9830/1470	9845/1485	10745/1565	10760/1580	10755/1565	10770/1580
	2.3	Axle load without load, front/rear	kg	2685/4075	2700/4090	2660/4140	2675/4155	2960/4350	2975/4365	2970/4350	2990/4360
TIRES	3.1	Tyres front/rear (C=Cushion,SE=superelastic,P=pneumatic)		Pneumatic	Pneumatic	Pneumatic	Pneumatic	Pneumatic	Pneumatic	Pneumatic	Pneumatic
	3.2	Tyre size, front		300-15-18PR(I)	300-15-18PR(I)	300-15-18PR(I)	300-15-18PR(I)	300-15-18PR(I)	300-15-18PR(I)	300-15-18PR(I)	300-15-18PR(I)
	3.3	Tyre size, rear		7.00-12-14PR(I)	7.00-12-14PR(I)	7.00-12-14PR(I)	7.00-12-14PR(I)	7.00-12-14PR(I)	7.00-12-14PR(I)	7.00-12-14PR(I)	7.00-12-14PR(I)
	3.5	Wheels, number front/rear (x=powered)		2x/2	2x/2	2x/2	2x/2	2x/2	2x/2	2x/2	2x/2
	3.6	Tread, front	b-10(mm)	1180	1180	1180	1180	1180	1180	1180	1180
	3.7	Tread, rear	b-11(mm)	1180	1180	1180	1180	1180	1180	1180	1180
DIMENSIONS	4.1	Tilt Mast/carriage, forward/backward	α/β (°)	6/12	6/12	6/12	6/12	6/12	6/12	6/12	6/12
	4.2	Height mast fully lowered	h_1 (mm)	2145	2145	2145	2145	2145	2145	2145	2145
	4.3	Free lift	h_2 (mm)	175	175	175	175	175	175	175	175
	4.4	Lift height	h_3 (mm)	3000	3000	3000	3000	3000	3000	3000	3000
	4.5	Height mast fully extended	h_4 (mm)	4300	4300	4300	4300	4300	4300	4300	4300
	4.7	Overhead guard height	h_6 (mm)	2250**	2250**	2250**	2250**	2250**	2250**	2250**	2250**
	4.8	Seat height/Standing height	h_7 (mm)	1168	1168	1168	1168	1168	1168	1168	1168
	4.12	Towing coupler height	h_{10} (mm)	355	355	355	355	355	355	355	355
	4.19	Overall length	l_1 (mm)	4280	4280	4280	4280	4560	4560	4560	4560
	4.20	Length to fork face	l_2 (mm)	3210	3210	3210	3210	3340	3340	3340	3340
	4.21	Overall width	b_1 (mm)	1490	1490	1490	1490	1490	1490	1490	1490
	4.22	Fork dimensions	s,e,l (mm)	55x150x1070	55x150x1070	55x150x1070	55x150x1070	55x150x1220	55x150x1220	55x150x1220	55x150x1220
	4.23	Carriage DIN 15173, Class / Form A,B		3A	3A	3A	3A	4A	4A	4A	4A
	4.24	Carriage width	b_3 (mm)	1200	1200	1200	1200	1200	1200	1200	1200
	4.31	Mast underclearance loaded	m_1 (mm)	145	145	145	145	145	145	145	145
	4.32	Underclearance centre wheelbase	m_2 (mm)	225	225	225	225	225	225	225	225
	4.33	Right angle stacking aisle with pallet 1000x1200 across forks	Ast (mm)	4586	4586	4586	4586	4733	4733	4733	4733
	4.34	Right angle stacking aisle with pallet 800x1200 across forks	Ast (mm)	4786	4786	4786	4786	4933	4933	4933	4933
	4.35	Turning radius	Wa mm	2800	2800	2800	2800	2935	2935	2935	2935
	4.36	Turning radius, inner	mm	820	820	820	820	880	880	880	880
PERFORMANCE	5.1	Travelling speed with/without load	km/h	18.0/19.5	23.5/24.5	18.0/18.0	22.0/22.0	18.0/19.5	23.5/24.5	18.0/18.0	22.0/22.0
	5.2	Lifting speed with/without load	mm/s	430/450	430/450	420/420	420/420	420/440	420/440	420/420	420/420
	5.3	Lowering speed with/without load	mm/s	450/450	450/450	450/450	450/450	450/450	450/450	450/450	450/450
	5.6	Drawbar pull, with/without load	kN	31050/24920	34150/27410	32300/27900	32300/27900	31900/25770	35090/28340	33200/28800	33200/28800
	5.8	Gradeability with/without load	%	24/22	26/24	25/24	25/24	22/20	24/22	23/22	23/22
	5.9	Acceleration with/without load	s	5.7/4.8	5.7/4.8	5.8/4.9	5.8/4.9	6.0/5.0	6.0/5.0	6.1/5.1	6.1/5.1
	5.10	Service brake		Hydraulic	Hydraulic	Hydraulic	Hydraulic	Hydraulic	Hydraulic	Hydraulic	Hydraulic
DRIVE	7.1	Engine manufacturer/type		ZD30	ZD30	TB45	TB45	ZD30	ZD30	TB45	TB45
	7.2	Engine rated power according ISO 1585	kW	55	55	71.3	71.3	55	55	71.3	71.3
	7.3	Rated engine revolutions	min^{-1}	2400	2400	2450	2450	2400	2400	2450	2450
	7.4	Number of cylinders/Displacement	cm^3	4/2953	4/2953	6/4478	6/4478	4/2953	4/2953	6/4478	6/4478
		Transmission speed		1/1	2/1	1/1	2/1	1/1	2/1	1/1	2/1
OTHERS	8.1	Type of drive control		Torque converter							
	8.2	Working pressure attachments	bar	13.7	13.7	13.7	13.7	13.7	13.7	13.7	13.7
	8.4	Noise level operator's ear according EN12053	dB(A)	82	82	82	82	82	82	82	82

* Excluding the weight for LPG bottle
** Overhead guard height with cabin: 2,381 mm

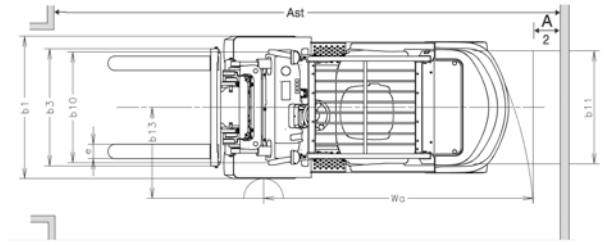

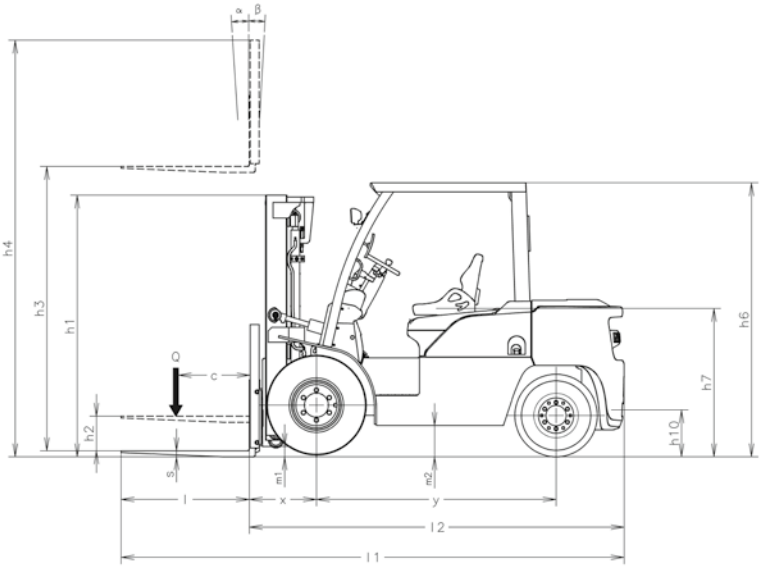

MAST SPECIFICATIONS & RATED CAPACITIES: FD & FGE: 4.5 TONNE

Mast type	Mast name	Max. fork height	Overall height			Free lift		Tilt angle forward/ backward	Load capacity[2] Load center 500 mm
			Fully lowered	Fully extended					4.5 tonne
				Without backrest	Std backrest	Without backrest	Std backrest		
		mm[1]	mm[1]	mm[1]	mm[1]	mm[1]	mm[1]	degrees	kg[1]
TWO STAGE (WIDE VIEW 2W)	2W 300	3000	2145	3855	4300	175	175	6/12	4500
	2W 330	3300	2295	4155	4600	175	175	6/12	4500
	2W 350	3500	2430	4355	4800	175	175	6/12	4500
	2W 370	3700	2545	4555	5000	175	175	6/12	4500
	2W 400	4000	2745	4855	5300	175	175	6/12	4500
	2W 450	4500	2995	5355	5800	175	175	6/6	4500
	2W 500	5000	3245	5855	6300	175	175	6/6	4500
TWO STAGE (FULL FREE 2F)	2F 300	3000	2145	3900	4300	1300	900	6/12	4500
	2F 330	3300	2295	4200	4600	1450	1050	6/12	4500
	2F 350	3500	2430	4400	4800	1585	1185	6/12	4500
	2F 370	3700	2545	4600	5000	1700	1300	6/12	4500
	2F 400	4000	2745	4900	5300	1900	1500	6/12	4500
THREE STAGE (FULL FREE 3F)	3F 385	3850	2145	4735	5150	1320	905	6/6	4500
	3F 430	4300	2295	5185	5600	1470	1055	6/6	4500
	3F 475	4750	2430	5635	6050	1605	1190	6/6	4500
	3F 515	5150	2545	6035	6450	1720	1305	6/6	4500*
	3F 550	5500	2745	6385	6800	1920	1505	6/6	4300*
	3F 600	6000	2995	6885	7300	2170	1755	6/6	3800*
	3F 650	6500	3245	7385	7800	2420	2005	6/6	2800*
	3F 700	7000	3495	7885	8300	2670	2255	6/6	2100*

[1] 1 inch = 25.4 mm 1kg = 0.4536 lb [2] Capacity with sinlge pneumatic tires unless indicated * Capacity with double tires

MAST SPECIFICATIONS & RATED CAPACITIES: FD & FGE: 5.0 TONNE

Mast type	Mast name	Max. fork height	Overall height			Free lift		Tilt angle forward/ backward	Load capacity[2] Load center 500 mm
			Fully lowered	Fully extended					5.0 tonne
				Without backrest	Std backrest	Without backrest	Std backrest		
		mm[1]	mm[1]	mm[1]	mm[1]	mm[1]	mm[1]	degrees	kg[1]
TWO STAGE (WIDE VIEW 2W)	2W 300	3000	2145	3885	4300	175	175	6/12	5000
	2W 330	3300	2295	4185	4600	175	175	6/12	5000
	2W 350	3500	2430	4385	4800	175	175	6/12	5000
	2W 370	3700	2545	4585	5000	175	175	6/12	5000
	2W 400	4000	2745	4885	5300	175	175	6/12	5000
	2W 450	4500	2995	5385	5800	175	175	6/6	5000
	2W 500	5000	3245	5885	6300	175	175	6/6	5000
TWO STAGE (FULL FREE 2F)	2F 300	3000	2145	3900	4300	1300	900	6/12	5000
	2F 330	3300	2295	4200	4600	1450	1050	6/12	5000
	2F 350	3500	2430	4400	4800	1585	1185	6/12	5000
	2F 370	3700	2545	4600	5000	1700	1300	6/12	5000
	2F 400	4000	2745	4900	5300	1900	1500	6/12	5000
THREE STAGE (FULL FREE 3F)	3F 385	3850	2145	4735	5150	1320	905	6/6	5000
	3F 430	4300	2295	5185	5600	1470	1055	6/6	5000
	3F 475	4750	2430	5635	6050	1605	1190	6/6	5000
	3F 515	5150	2545	6035	6450	1720	1305	6/6	5000*
	3F 550	5500	2745	6385	6800	1920	1505	6/6	4700*
	3F 600	6000	2995	6885	7300	2170	1755	6/6	3800*
	3F 650	6500	3245	7385	7800	2420	2005	6/6	2800*
	3F 700	7000	3495	7885	8300	2670	2255	6/6	2100*

[1] 1 inch = 25.4 mm 1kg = 0.4536 lb [2] Capacity with sinlge pneumatic tires unless indicated * Capacity with double tires

Especially developed to provide our customers with the most reliable and efficient technology in daily operation, TCM's counterbalanced trucks have been designed to meet the most challenging requirements even in the most demanding environments.

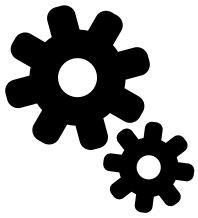

RELIABLE

Proven technology paired with practical features: TCM stands for a unique mixture of customer-oriented solutions you can count on.

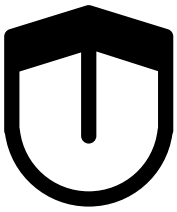

DURABLE

Harsh conditions can be a challenge. For TCM trucks, it's their natural habitat. 24 hours a day, 7 days a week.

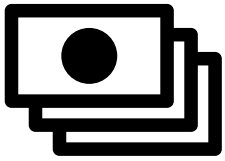

ECONOMICAL

Balancing economy and environmentally friendly performance in TCM trucks has always been a top priority, facilitating a profitable and energy-efficient deployment of our high-end material handling solutions.

TCM - A BRAND OF UNICARRIERS CORPORATION
T-FD&FGE3.5-5.0.S.EN/TCM-2015-01
UniCarriers Corporation reserves the right to make any changes without notice concerning colours, equipment or specifications detailed in this brochure, or to discontinue individual models. The colours of vehicles delivered may differ slightly from those in this brochure. The specifications vary for different countries depending on local market conditions. Please consult your local dealer to ensure that the vehicle delivered accords with your expectations. All values are determined based on the standard condition and may vary, due to motor and system tolerances, condition of the truck and operational conditions. Some equipment shown on photos are optional.